K6C4-140

Electric Actuator Size 4
COMPACT

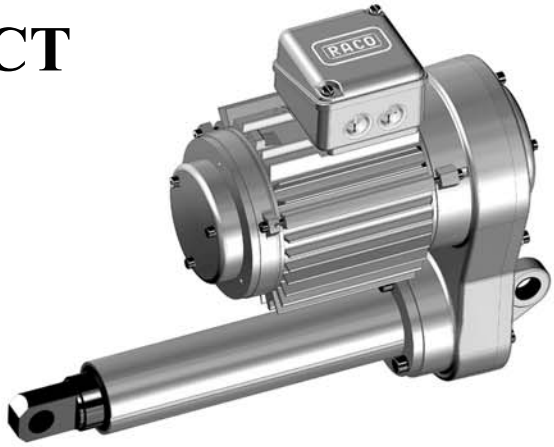

Screw Type: BALL Screw

Mounting: Female Clevis
Spherical Rod End
Male Rod End
Rear Eye

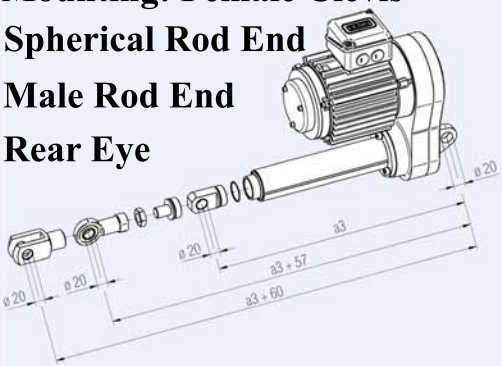

Lubrication: For Life

Protection Rating: IP54

Power Transfer: HTD
Timing Belt

Motor: 460V AC
60 Hz, 3 Phase
Thermal Switch
Optional Brake

Options: Limit Switches
EPS02, EPS06
Vector Drive
Position Control
Thrust Control

Compact Size 4 Selection Chart

BALL Screw

Actuator Type	Nominal Force	Nominal Actuator Speed	Stroke Range min.	max	Run Torque @Nominal Force	Start-up Torque @Nominal Force	Nominal Motor Size	Pol	Motor Current @ Load/460V	Stall Torque
	lbf.	inch/sec.	inch	inch	lb-ft.	lb-ft.	kW	P	A	lb-ft.
K6C4-140	1125	1.9	3.9	23.6	4.31	4.89	0.30	8	1.43	7.60
K6C4-140	1125	5.7	3.9	23.6	4.31	4.89	0.90	4	2.51	8.19

Standard Stroke, Increments in inches							
Stoke	3.9"	7.9"	11.8"	15.7"	19.7"	23.6"	
a3	12.99"	16.93"	20.87"	24.80"	28.74"	32.68"	

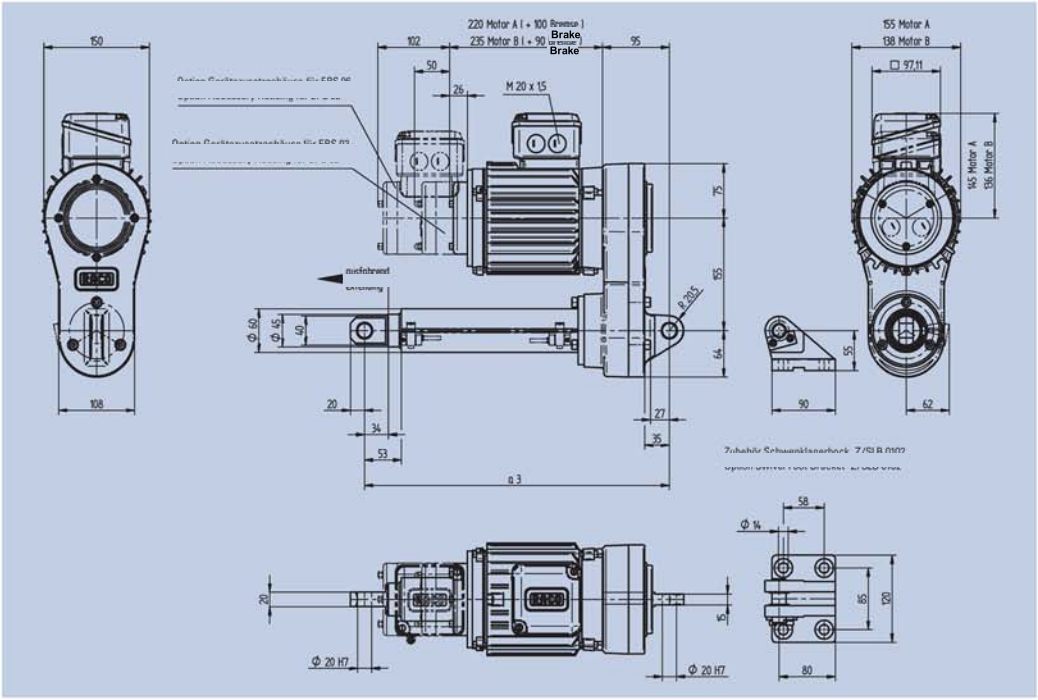

RACO International, L.P.
3350 Industrial Blvd., Bethel Park PA 15102, Tel: 412-835-5744, Fax: 412-835-0338, web: www.racointernational.com